Structure 3 x 3 straight

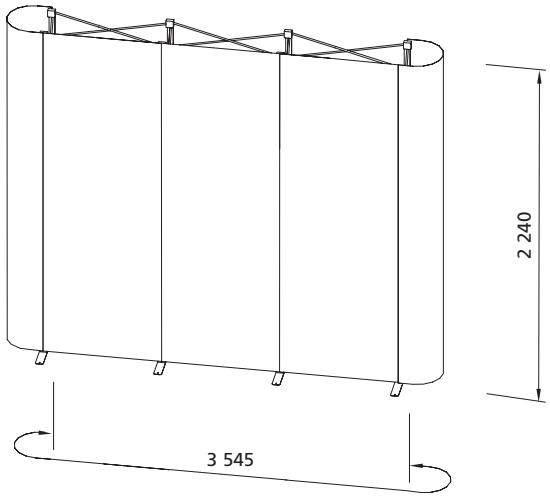

Graphic dimensions

Total size: 3 545 x 2 240 mm

Front panel dimension: 733 x 2 240 mm

Side panel dimension: 673 x 2 240 mm

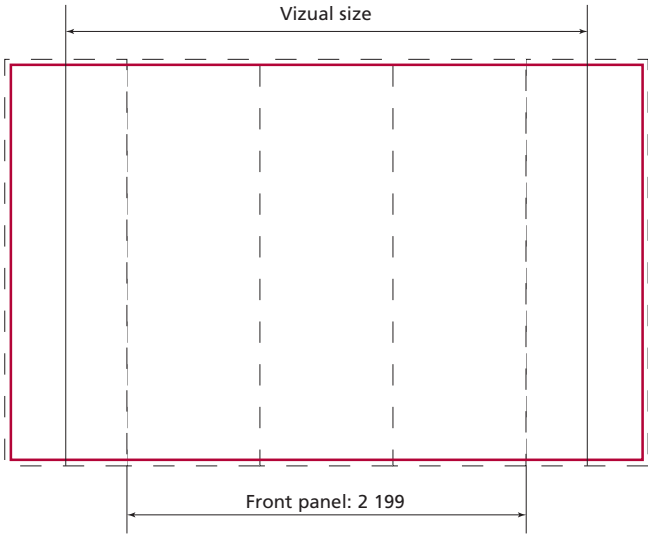

Graphic preparation

Entire format: 3 545 x 2 240 mm

Printing area: 3 585 x 2 280 mm

Overlap: 20 mm on each side of entire format
WITHOUT CUTTING MARKS

Data requirements for digital print:

Bitmap applications:

TIFF, GIF, IFF, BMP, PICT, TARGA, EPS, Photoshop - PSD (version 8 and lower)

All data must be prepared on a 1:1 scale. Pictures on a scale of 1:4 or lager (up to 1:1) scanned in with 320 dpi (physical resolution).

Vector applications:

CorelDraw – CDR (version 11 and lower), Illustrator – AI or EPS (version 11 and lower)

Logos and texts must be converted into paths.

Other applications:

Acrobat (version 6 and lower)

Texts integrated into the file or converted into paths

Other applications after consultation

Colours:

All data have to be in CMYK (be aware of fotos in RGB and direct colours in Illustrator) and must have defined the used colour profile. Otherwise we do not guarantee desired colours.

Possible data compression:

ZIP, ARJ, RAR, Stuffit

Data media:

Floppy 3,5" (only for PC), CD a CDRW (for PC), external USB HD, data transfer through FTP

Other media after consultation